Talia

20 707 Kitchen wideset

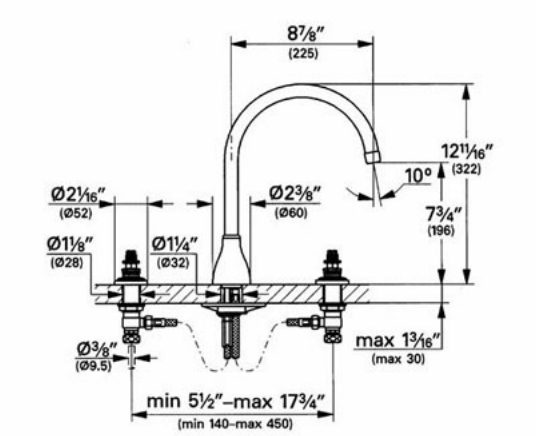

Description

- DISCONTINUED PRODUCT -
Use as parts reference only

Flow Rate

2.2 gpm at 60 psi,
2.5 gpm at 80 psi (9.5 lpm)

Code Compliance

ASME/ANSI A112.18.1M
ASSE Standard 1016

Finish Options

20 707 OOO Starlight® Chrome
20 707 ROO Infinity Polished Brass
20 707 RRO Velour Chrome

GROHE America, Inc 241 Covington Drive, Bloomingdale, IL 60108 630-582-7711 Fax:630-582-7722
GROHE Canada, Inc 1230 Lakeshore Road East, Mississauga, Ontario Canada L5E 1E9 905.271.2929 Fax:905.271.9494